QUADRO FRAMES
36 Harlow St., Worcester, MA, 01605
Phone: 888-366-8646, Fax 877-865-3219
E-Mail: sales@quadroframes. com

Frame Hanging System Instructions

1. **Install Brass Mounting Clips onto Wall:**

Screw the supplied mounting clips securely into the wall where the track is to be installed.

- **Clips must be precisely aligned and mounting on a flush plane surface.**
- **Clips should be spaced evenly, 6 clips per 72" length of rail.**
- **Screws installed into a stud will provide better load bearing capacity.**

2. **Track Installs onto Wall via Clips:**

- **The track rail snaps onto the mounted clips as shown.**

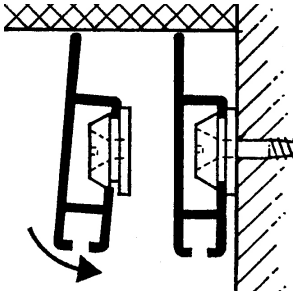

3. **Finish Track Installation:**

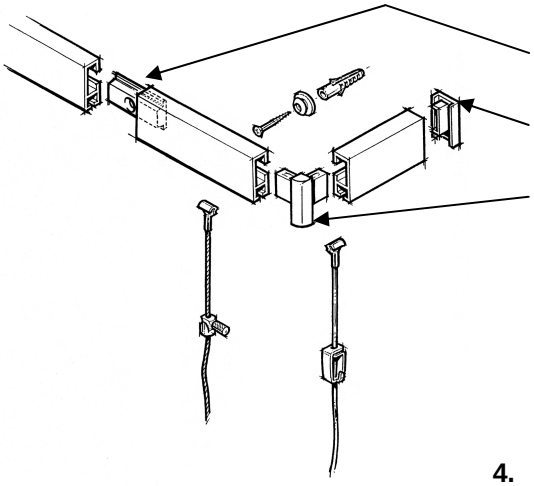

- **Track rails can extend to any length via butt-joint connectors show.**
- **Snap end caps onto the extremities of the rail system to ensure cables are not accidentally slid off an end.**
- **Track rails can install around inside or outside corners using corner connectors shown.**
- **Track sections can be cut to custom lengths using standard metal working tools (track is aluminum).**
- **Track sections can be painted as required (by customer).**

4. **Installing Cables and Hangers:**

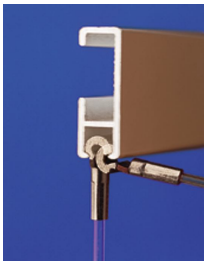

- **Install and remove cables by rotating the metal end into the track at any position, as shown.**
- ***No need to slide cables on or off at the ends! Add or Remove as many cables as required anytime!***
- **Add Zipper hangers from the end of the cables. Press button on Zipper hanger to slide onto cable. Press button to adjust position on cable, release to lock.**

Cables slide to any position horizontally and Zipper hangers slide to any position vertically along the cable for complete flexibility in positioning artwork!